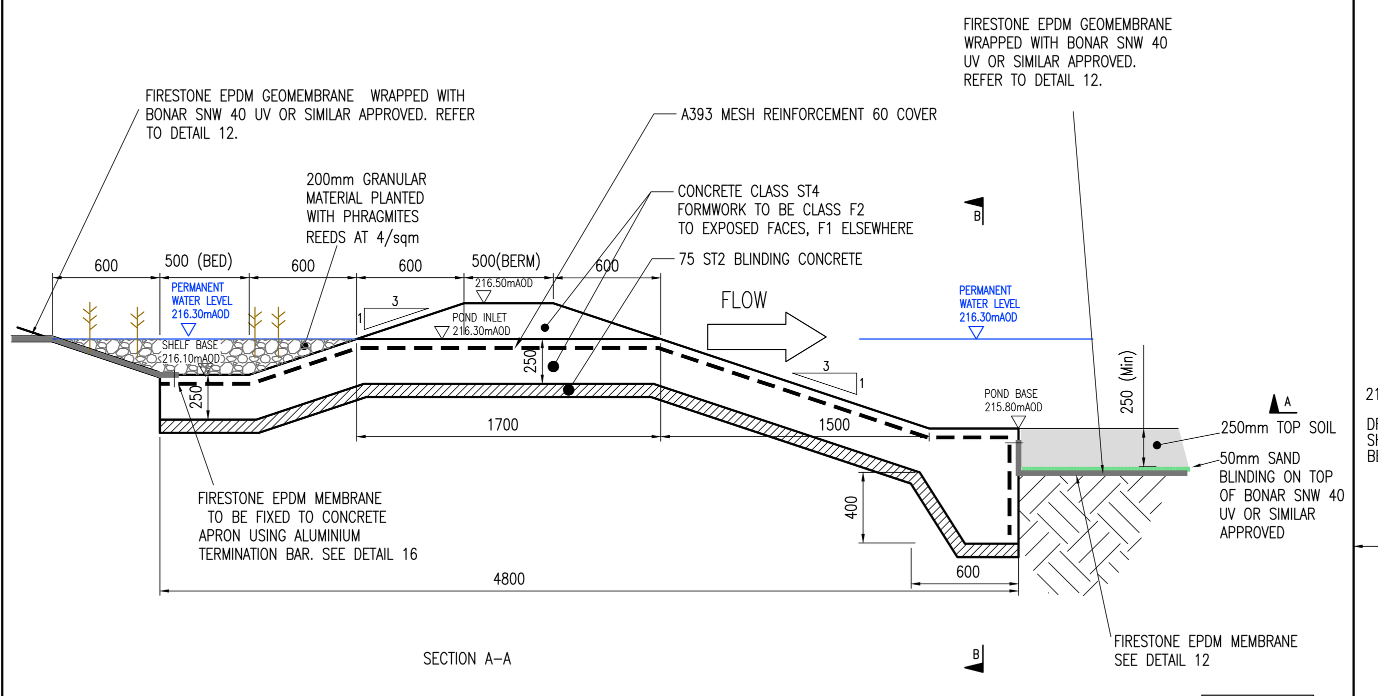

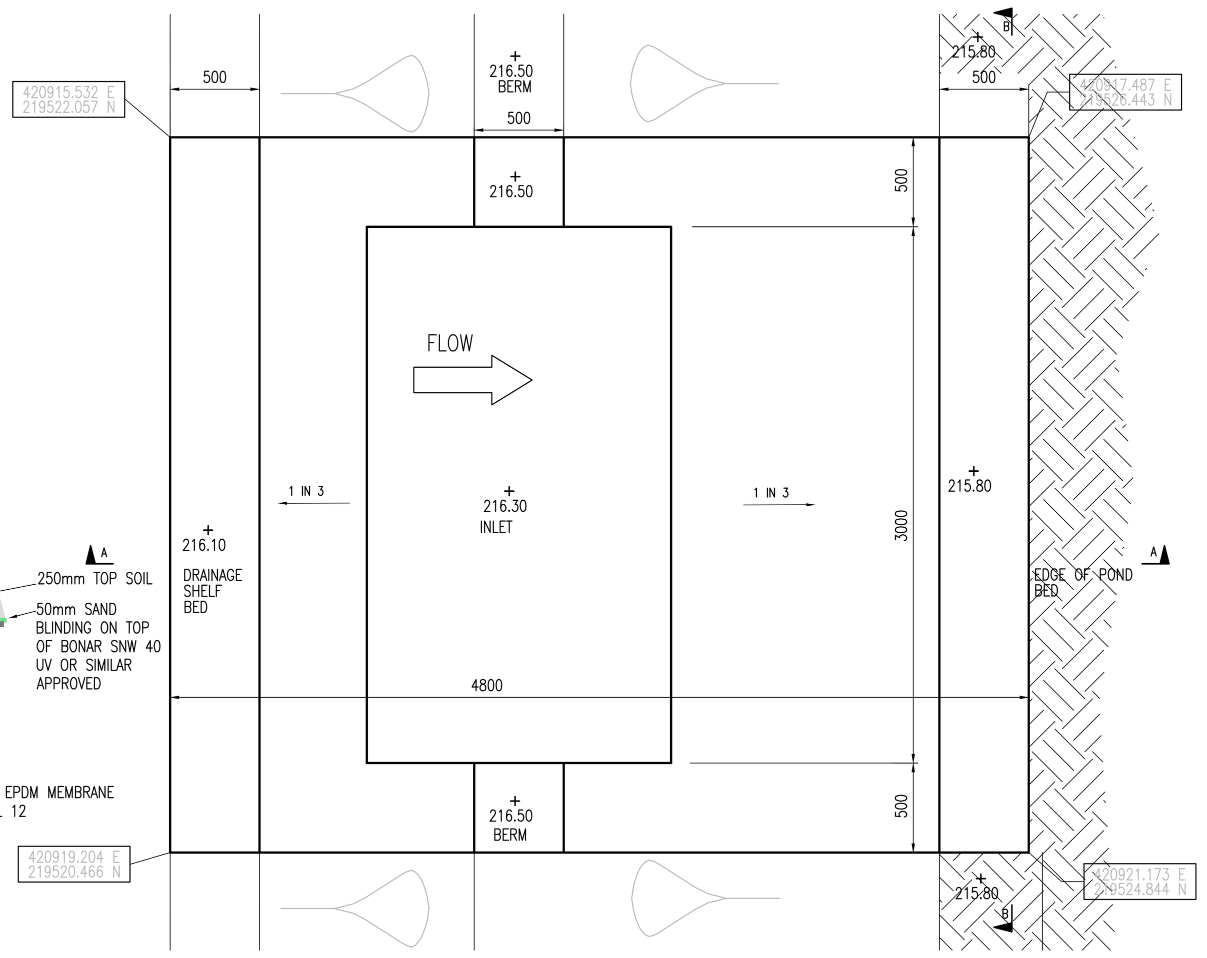

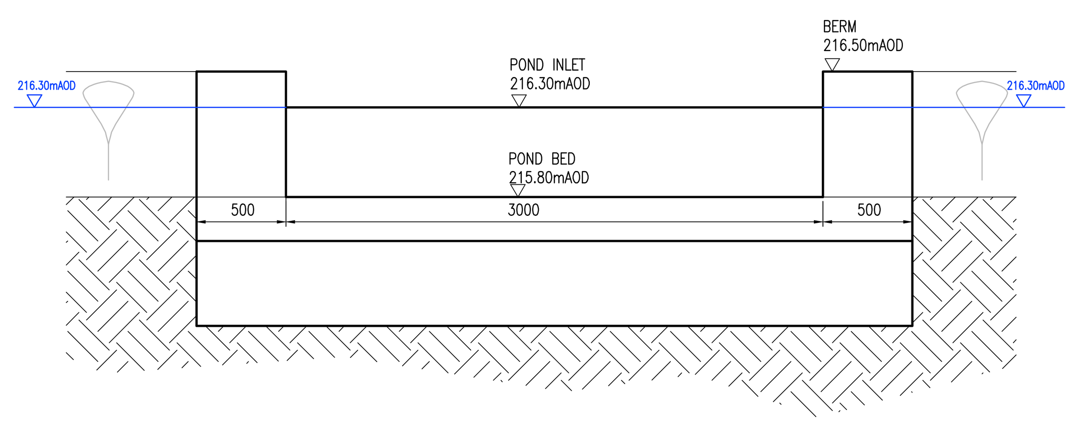

DETAIL 6: REED–BED DRAINAGE SHELF–INLET TO POND
SCALE 1:25

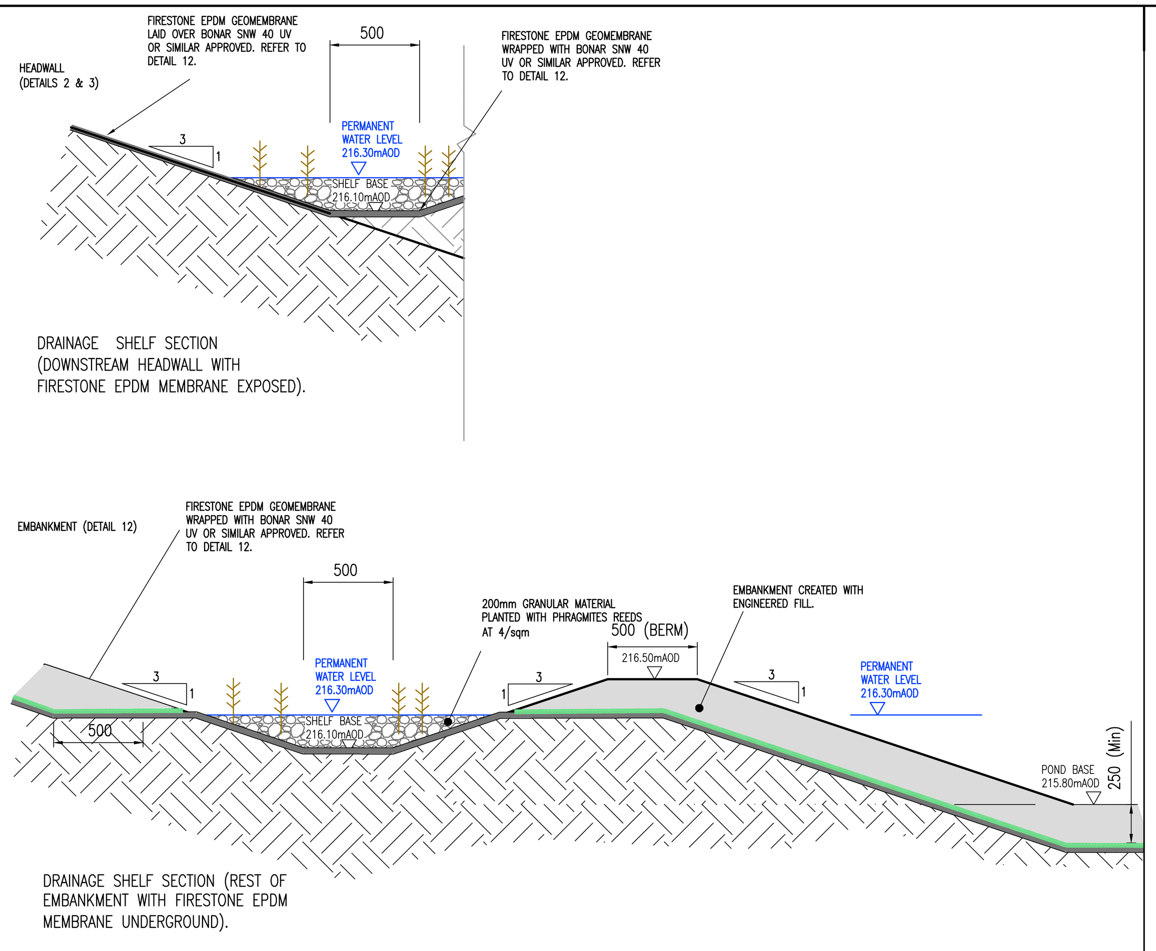

DETAIL 7: REED–BED DRAINAGE SHELF
STANDARD CROSS SECTION

DO NOT SCALE

NOTES

1. ALL DIMENSIONS ARE IN MILLIMETRE UNLESS STATED OTHERWISE.
2. THIS DRAWING SHOULD BE READ IN CONJUNCTION WITH ALL OTHER RELEVANT ARCHITECT & ENGINEERING DETAILS, DRAWINGS & SPECIFICATIONS.
3. FOR POND LEVELS REFER TO DRG 0412/RP/200.
4. FOR POND ARRANGEMENTS REFER TO WSP DRAWING 0412/GA/201.
5. FOR POND SETTING OUT REFER TO WSP DRAWING 0412/SO/200
7. FOR GENERAL DRAINAGE DETAILS, REFER TO DRG 0412/GA/201 & 0412/S104/114
8. ALL WORKS IN ACCORDANCE WITH SPECIFICATIONS FOR HIGHWAY, OR AS OTHERWISE INSTRUCTED.
9. DIMENSIONS GIVEN FOR TRASH & ANTI PERSONAL SCREENS ARE INDICATIVE AND FOR BUDGET PURPOSES ONLY. THE CONTRACTOR/MANUFACTURER IS RESPONSIBLE FOR THE DESIGN OF THE SCREENS AND FABRICATION DETAILS AND ENSURING SATISFACTORY FIT WITH RESPECTIVE HEADWALLS STRUCTURES.

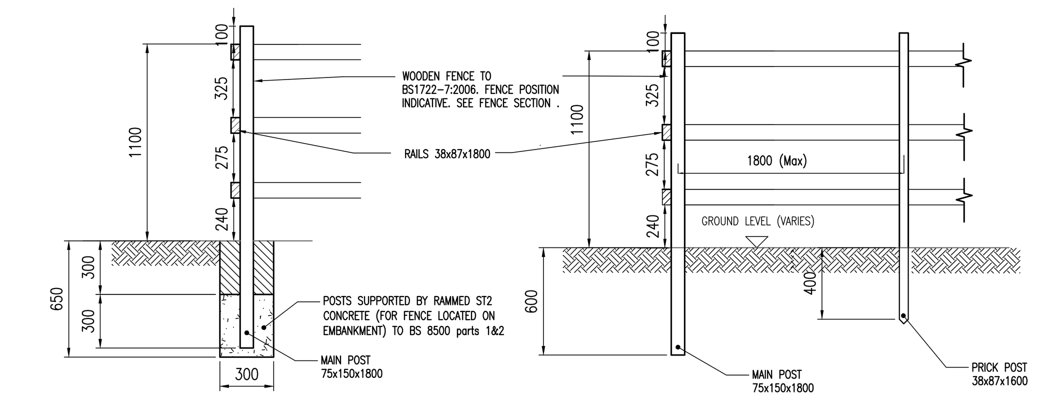

DETAIL 8– FENCING (N.T.S)
TYPICAL DETAILS

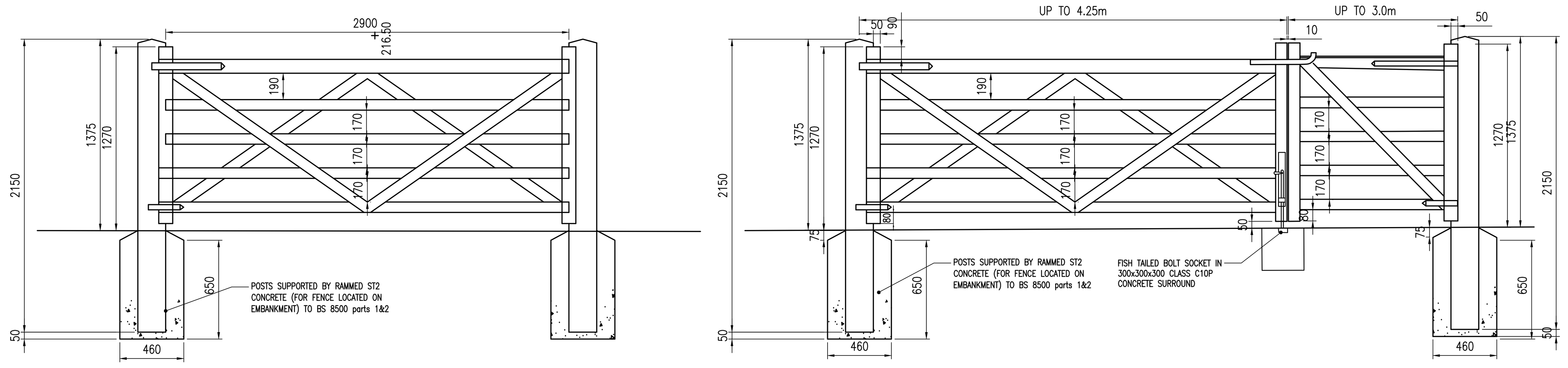

NOTES:
1. TOP AND BOTTOM RAILS TO BE MORTICED FULL WIDTH AND PEGGED WITH 55ø OAK DOWELS. OTHERS HALF MORTICED. BRACES TO STILES AND BOLTED TO RAILS.
2. GATES AND POSTS TO BE TREATED LARCH, FACTORY PRESSURE IMPREGNATED WITH WITH 'TANOLITH' OR EQUIVALENT TO BS4072. ALL CUTS TO BE SIMILARLY TREATED.
3. GATES TO BE LIFTED WITH CAPTIVE HINGE SET AS DETAILED. TOP STRAP BAND TO HAVE AN EYE ON CORNER AS SUPPLIED BY CENTREWIRE (TEL.01491614490) FITTED WITH EYE ADJACENT TO POST. BOTTOM FITTING TO BE ADUSTABLE. GATE MUST BE SELF CLOSING.
4. ALL METAL FITTINGS AND SCREWS TO BE HEAVILY GALVANISED TO BS 729.
5. GATES TO BE SITED ON LEVEL GROUND.
6. FIELD GATES TO COMPLY WITH BS 3470

DESCRIPTION OF TIMBER MATERIAL:
- HANGING POST FOR BOTH GATES: 200x200x2150 LONG
- HANGING STILE: 100x75 FOR GATES UP TO 3.0m WIDTH; 125x75 FOR GATES ABOVE 3.0m WIDTH
- SHUTTING STILE FOR BOTH GATES: 75x75
- TOP RAIL: 100x75 FOR GATES UP TO 3.0m WIDTH; 125x75 FOR GATES ABOVE 3.0m WIDTH; ALL TAPERING TO 75x75
- ALL OTHER RAILS: 75x25
- BRACED HOUSED IN TO RAIL: 75x25

DETAIL 9– TYPICAL SINGLE & DOUBLE TIMBER FIELD GATE DETAILS (N.T.S)

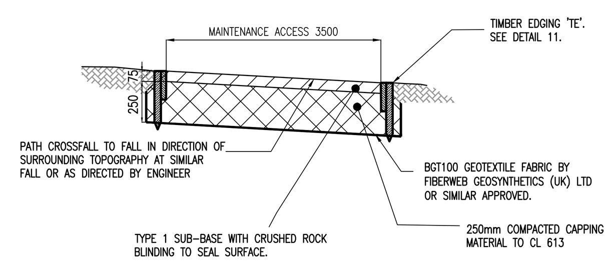

DETAIL 10– MAINTENANCE ACCESS (N.T.S)
(OUTSIDE POND EMBANKMENT)

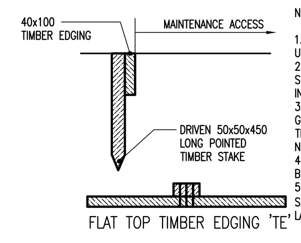

NOTES.
1. ALL DIMENSIONS ARE IN MILLIMETRES UNLESS OTHERWISE STATED.
2. TIMBER FOR PATH EDGINGS AND STAKES SHALL BE LARCH OR DOUGLAS FIR PRESERVED IN COMPLIANCE WITH CL.311.
3. STAKES SHALL BE DRIVEN IN AT NOT GREATER THAN 1000 CENTRES AND EDGING TIMBER SHALL BE FIXED TO EACH STAKE BY 2 No. 80 LONG EASYDRIVE PLATED SCREWS.
4. WHERE FOOTWAY EDGINGS ABUT THEY SHALL BE SECURED.
5. ALL CLAUSE NUMBERS REFER TO THE SPECIFICATION FOR HIGHWAY WORKS (SHW), LATEST EDITION.

DETAIL 11– TIMBER EDGING
DETAILS TYPE 'TE' (N.T.S)

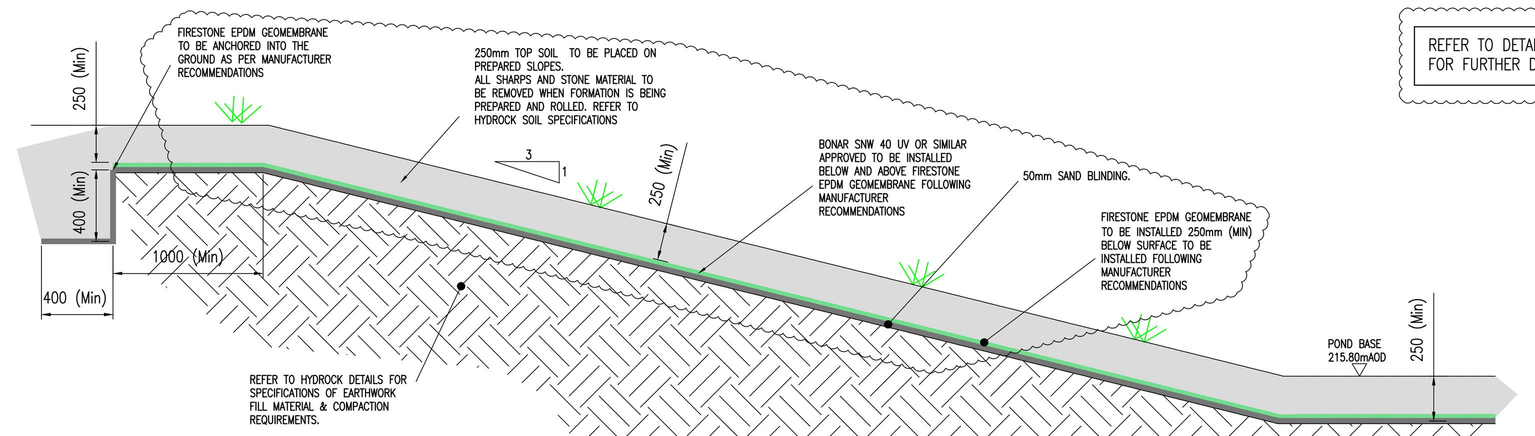

REFER TO DETAIL 16, 17, 18 & FOR FURTHER DETAILS.

DETAIL 12– FIRESTONE EPDM GEOMEMBRANE
DETAILS– INSTALLATION AND ANCHORING (N.T.S)

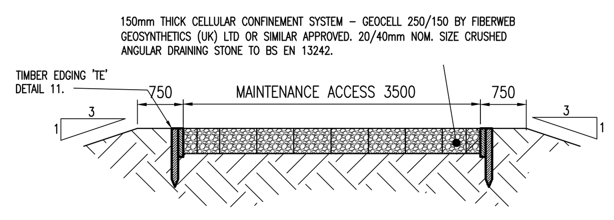

REFER TO DETAILS 16 & 17 FOR FURTHER DETAILS.

DETAIL 13– MAINTENANCE ACCESS (N.T.S)
(CONSTRUCTION ON TOP OF EMBANKMENT)

ROCKER PIPE LENGTHS	
NOMINAL DIAMETER (mm)	EFFECTIVE LENGTH (mm)
150–600	600
601–750	1000
OVER 750	1250

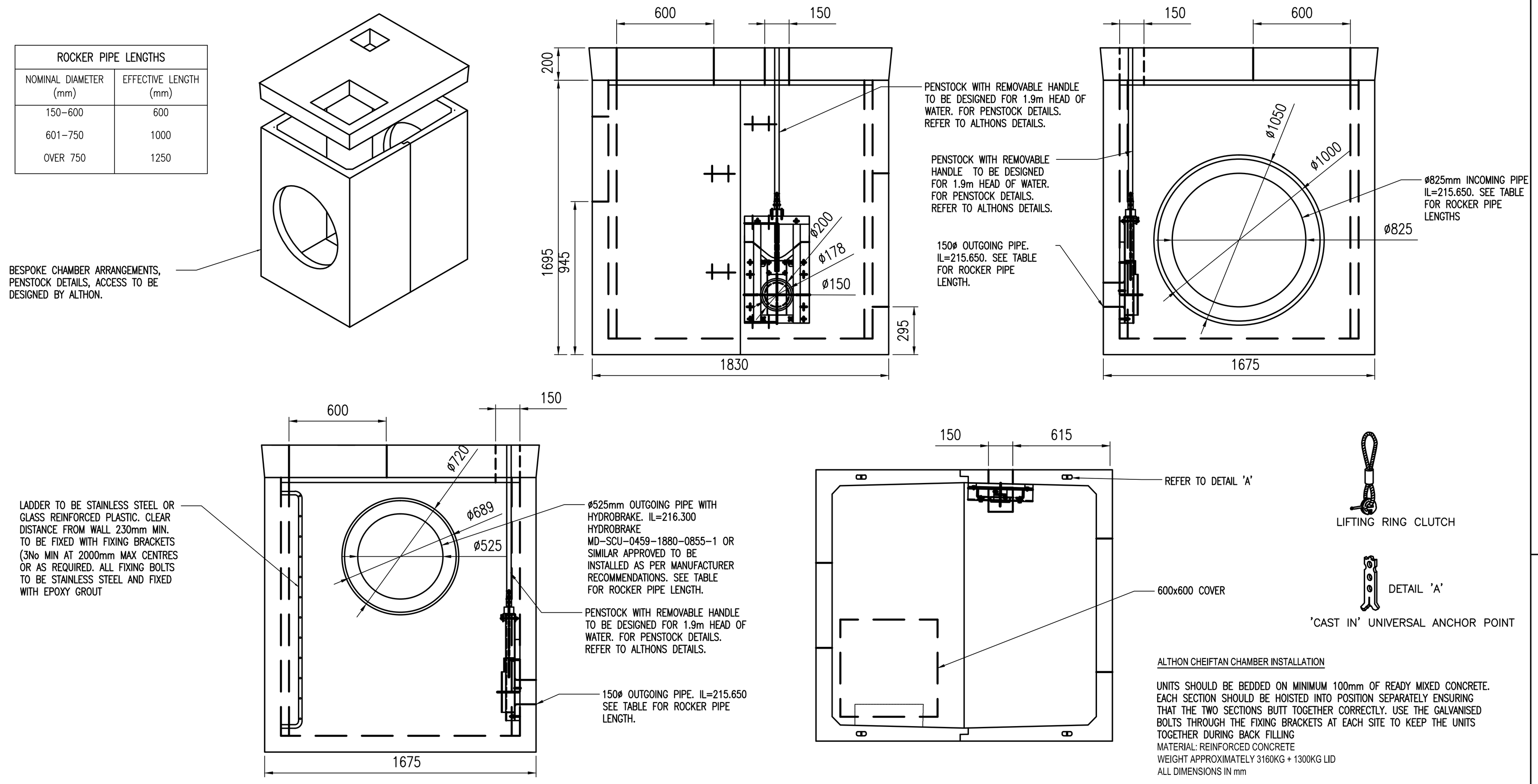

ALTHON CHEIFTAN CHAMBER INSTALLATION

UNITS SHOULD BE BEDDED ON MINIMUM 100mm OF READY MIXED CONCRETE. EACH SECTION SHOULD BE HOISTED INTO POSITION SEPARATELY ENSURING THAT THE TWO SECTIONS BUTT TOGETHER CORRECTLY. USE THE GALVANISED BOLTS THROUGH THE FIXING BRACKETS AT EACH SITE TO KEEP THE UNITS TOGETHER DURING BACK FILLING
MATERIAL: REINFORCED CONCRETE
WEIGHT APPROXIMATELY 3160KG + 1300KG LID
ALL DIMENSIONS IN mm

DETAIL 14– S200 HYDROBRAKE & PENSTOCK CONTROL CHAMBER (S200) (N.T.S)

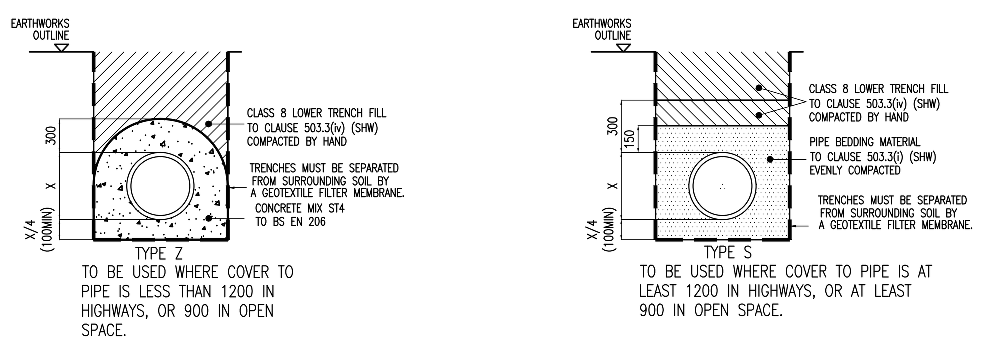

NOTES.
1. ALL CLAUSE NUMBERS REFER TO THE SPECIFICATION FOR HIGHWAY WORKS, LATEST EDITION.
2. FOR TYPE Z TRENCH THE CONCRETE COVER MAY BE FORMED TO A RADIUS, BATTER OR HORIZONTAL SURFACE. MINIMUM COVER OF CONCRETE SHALL BE 150mm.
4. FOR TRENCH TYPE Z FLEXIBLE CONSTRUCTION JOINTS ARE TO BE FORMED IN THE CONCRETE TO COINCIDE WITH EACH PIPE JOINT WITH PREFORMED JOINT FILLER TO CLAUSE 1015 OF THE SPECIFICATION.
5. THE MINIMUM AND MAXIMUM TRENCH WIDTHS ARE AS FOLLOWS:–
MINIMUM= X+300
MAXIMUM= X+600
6.FOR MEASUREMENT PURPOSES THE VOLUMES OF HARD BREAKOUT OR IMPORTED BACKFILL TO TRENCHES SHALL BE CALCULATED USING THE MEAN OF THE MIN AND MAX TRENCH WIDTHS.
7. BACKFILL ABOVE EARTHWORKS OUTLINE TO MATCH EXISTING/PROPOSED CONSTRUCTION.

DETAIL 15– PIPE BEDDING DETAILS (N.T.S)

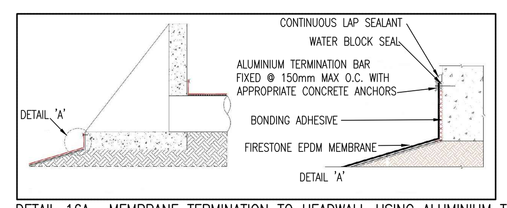

DETAIL 16A– MEMBRANE TERMINATION TO HEADWALL USING ALUMINIUM TERMINATION BAR
(NOTE:COVERING LAYOUT OF GEOTEXTILE SURCHARGE NOT SHOWN)

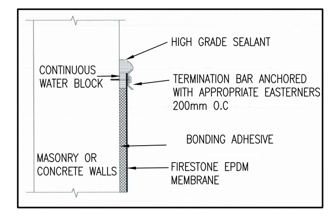

DETAIL 16B: FIRESTONE EPDM GEOMEMBRANE DETAILS– WALL FLASHING TERMINATION ABOVE MAXIMUM WATER LINE ON MASONRY AND CONCRETE STRUCTURE (N.T.S)

REV	DATE	BY	DESCRIPTION	CHK	APD
F	12/10/17		REFERENCES & DETAIL 12 UPDATED		
E	27/04/17		DRAWING STATUS UPDATED. COORDINATES ADDED		
D	13/12/16		DRAWING STATUS UPDATED		
C	01/12/2016		DETAILS UPDATED		
B	11/11/2016		DETAILS UPDATED		
A	30/09/2016		FIRST ISSUE		JDP

DRAWING STATUS: ISSUED FOR CONSTRUCTION

WSP | PARSONS BRINCKERHOFF

Mountbatten House, Basing View, Basingstoke, Hampshire RG21 4HJ
Tel: +44 (0)1256 318800 Fax: +44 (0)1256 318700
www.wspgroup.com www.pbworld.com

CLIENT: LINDEN HOMES / BOVIS HOMES

ARCHITECT: IDP

PROJECT: UPPER RISSINGTON CONSORTIUM ONSITE WORKS

TITLE: POND DETAILS 6 TO 15 SHEET 2 OF 4

SCALE @ A0: NTS	CHECKED: JB	APPROVED: JDP
CAD FILE: 0412-SD-201	DESIGN-DRAWN: JB	DATE: September 2016
PROJECT No: 50600412	DRAWING No: 0412-SD-201	REV: F

© WSP Group Ltd

S:\50600412 – Upper Rissington – Consortium\E Drawings\Development\AUTOCAD\SD Standard Details\0412-SD-201.dwg 13/10/2017 13:31:48 Blavignac, Julien